US CARGO CONTROL
866-444-9990 | uscargocontrol.com
202 Blue Creek Dr, Urbana, IA 52345

2" SHORT WIDE HANDLE RATCHET

PN# RAT51

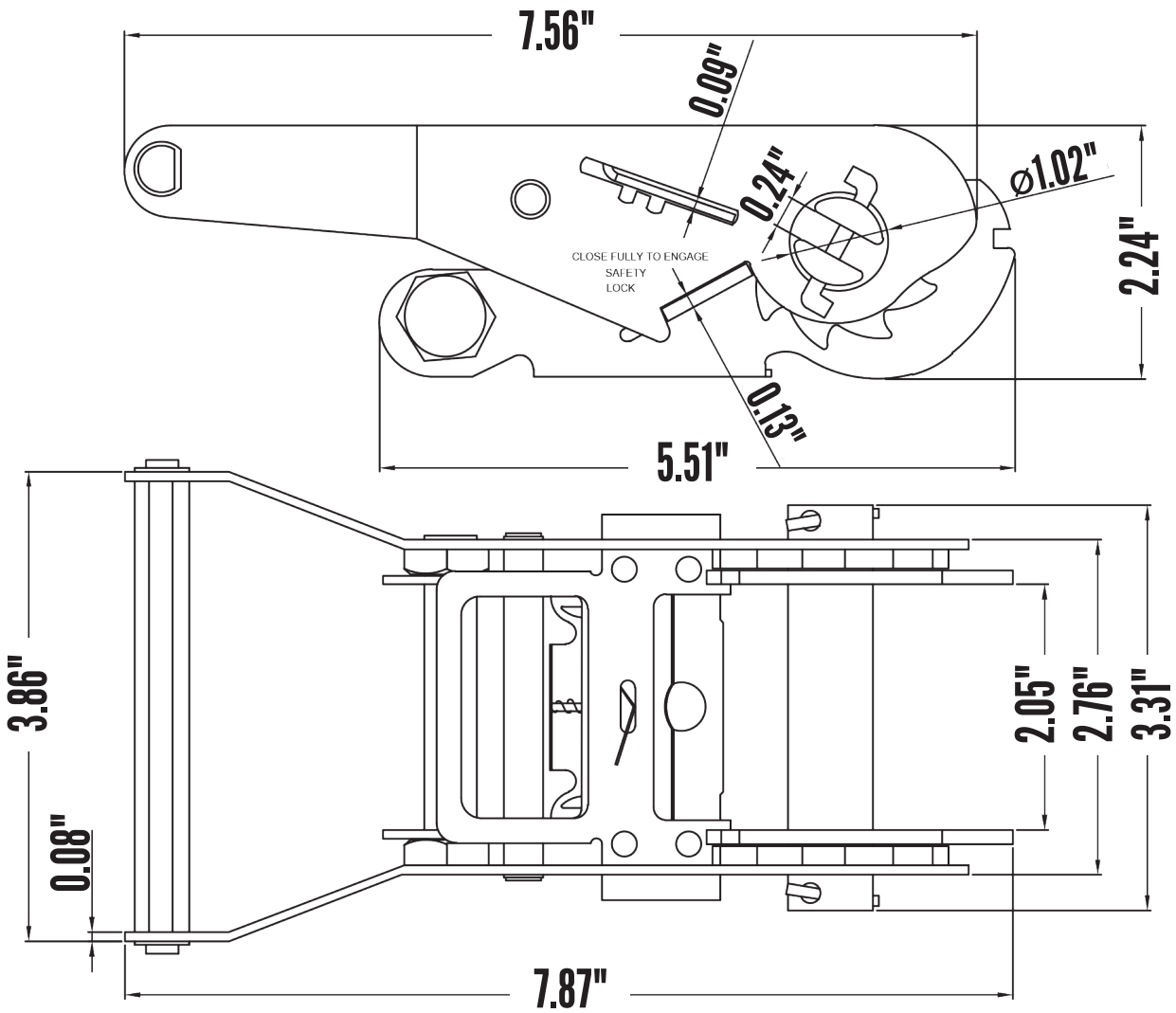

SPEC INFORMATION	
Working Load Limit:	3,666 lbs
Assembly Break Strength:	11,000 lbs
Finish:	Zinc Plated
Product Weight:	2 lb